Mondella
ROCOCO

Rococo
BACK TO WALL TOILET SEAT

- 412-461mm L x 361mm W.
- Soft-Close Toilet Seat.
- Includes Adjustable Hinge Fixing.
- Easy to Install.

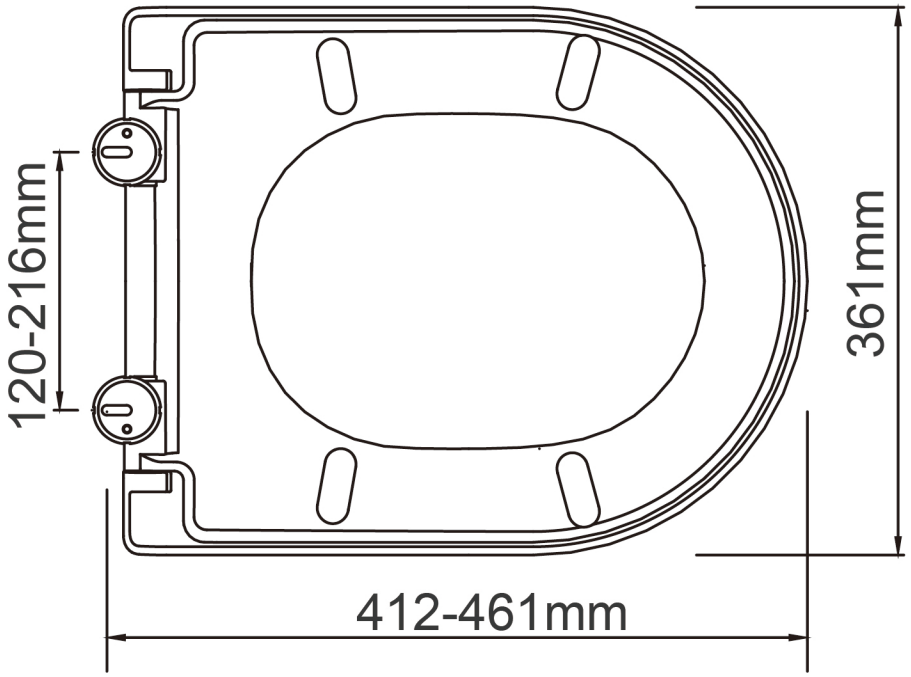

Item Number
5140305